SPEC SHEET

DCF1900-T0140
1.93 GHz to 1.99 GHz
DCF Drop-in ISOLATORS & CIRCULATORS

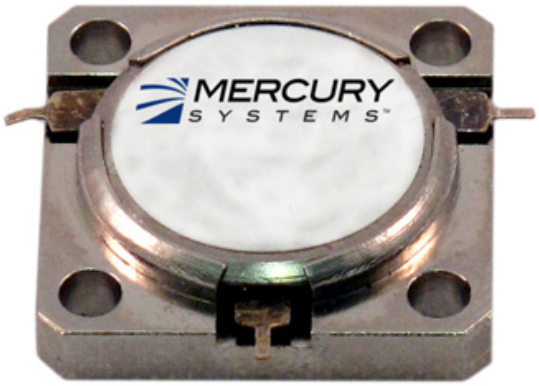

Specifications

RF Frequency	1.93 GHz to 1.99 GHz
Isolation	20 dB (min)
Insertion Loss	0.3 dB (max)
VSWR	1.25:1
Peak Power	1000 Watts (max)
Average Power	100 Watts (max)
Power Forward	125 Watts
Power Reverse	50 Watts
Package Size	0.75 x 1.00 x 0.22"

Environmental

Operating Temperature	-40 to 85 °C

Notes

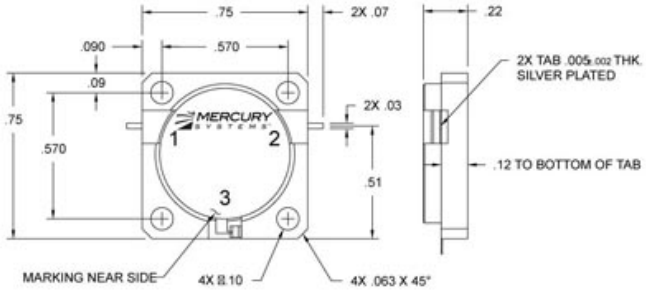

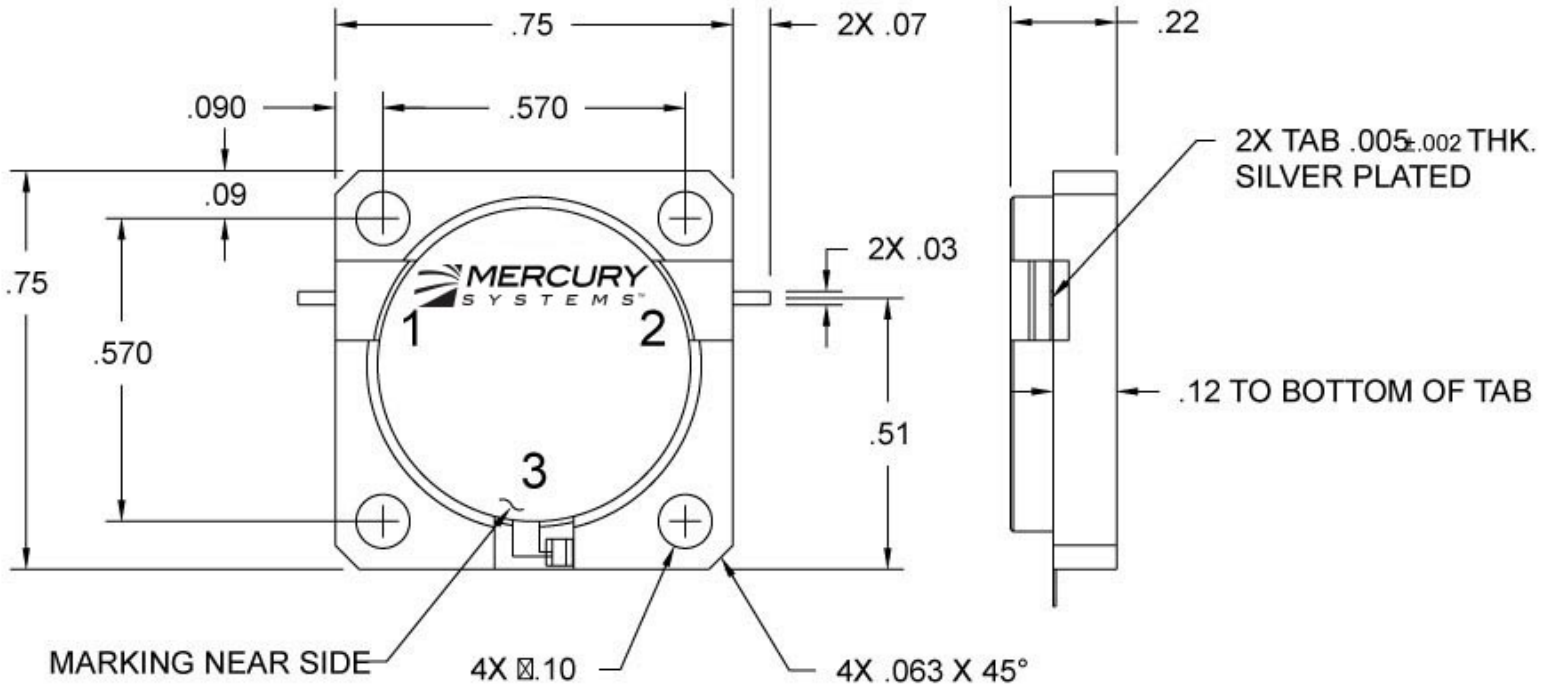
.75
2X .07
.22
.090
.570
2X TAB .005±.002 THK.
SILVER PLATED
.09
2X .03
.75
MERCURY
SYSTEMS
1
2
.570
.12 TO BOTTOM OF TAB
.51
3
MARKING NEAR SIDE
4X ⊠.10
4X .063 X 45°