SPEC SHEET

DNF1900-T0100
1.44 GHz to 1.536 GHz
DNF Drop-in ISOLATORS & CIRCULATORS

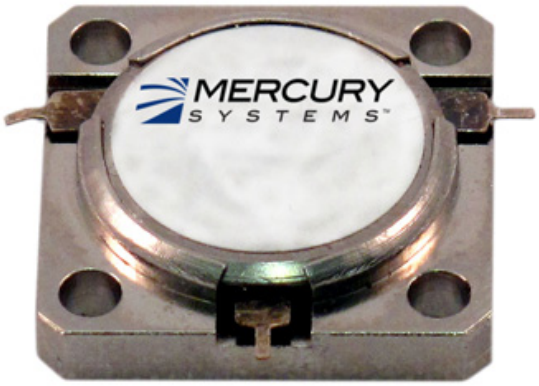

Specifications

RF Frequency	1.44 GHz to 1.536 GHz
Isolation	18 dB (min)
Insertion Loss	0.5 dB (max)
VSWR	1.3:1
Peak Power	1 Watts (max)
Average Power	100 Watts (max)
Package Size	0.75 x 0.75 x 0.25"

Environmental Notes

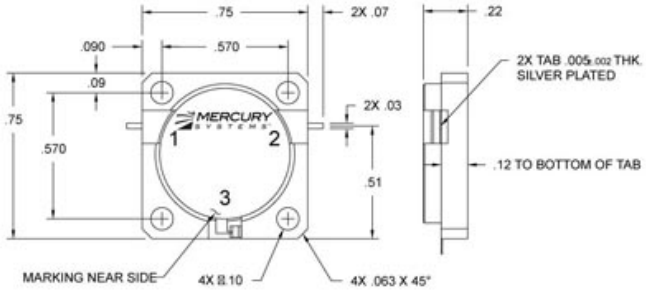

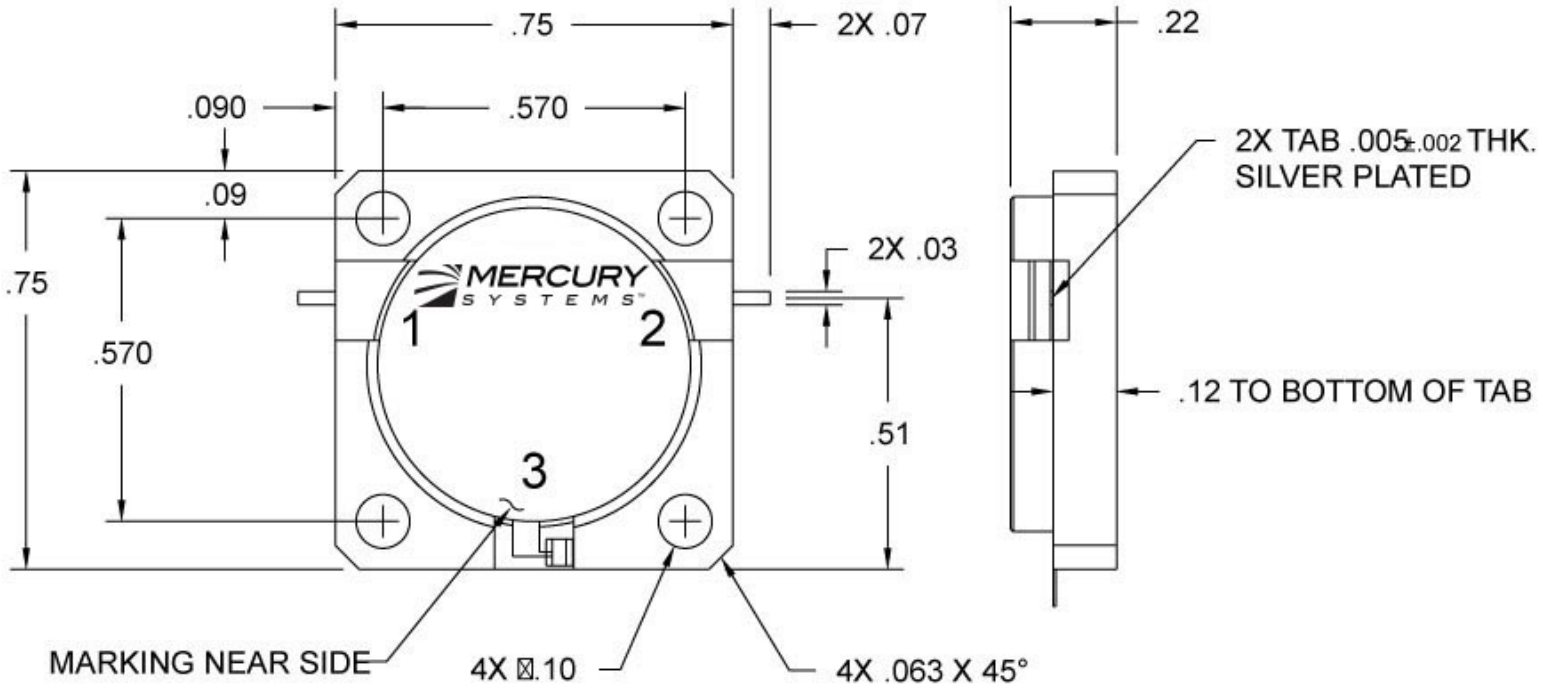
.75
2X .07
.22
.090
.570
2X TAB .005±.002 THK.
SILVER PLATED
.09
2X .03
.75
MERCURY
SYSTEMS
1
2
.570
.12 TO BOTTOM OF TAB
.51
3
MARKING NEAR SIDE
4X ⊠.10
4X .063 X 45°