SPEC SHEET

SMD1300-T0300
8.5 GHz to 10.5 GHz
Stripline ISOLATORS & CIRCULATORS

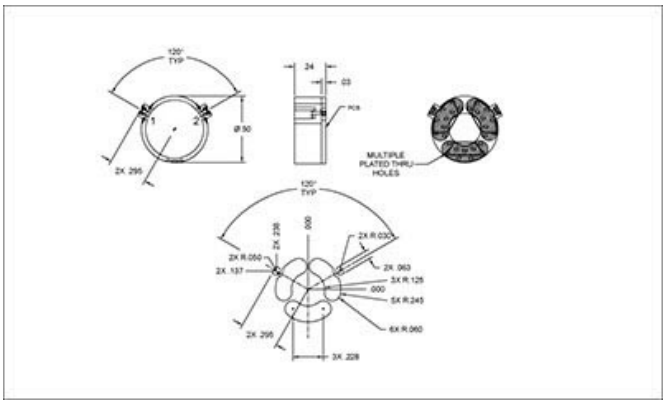

Specifications

RF Frequency	8.5 GHz to 10.5 GHz
Isolation	18 dB (min)
Insertion Loss	0.5 dB (max)
VSWR	1.25:1
Power Forward	5 Watts
Power Reverse	1 Watts
Package Size	0.5"

Environmental

Operating Temperature	-35 to 85 °C

Notes

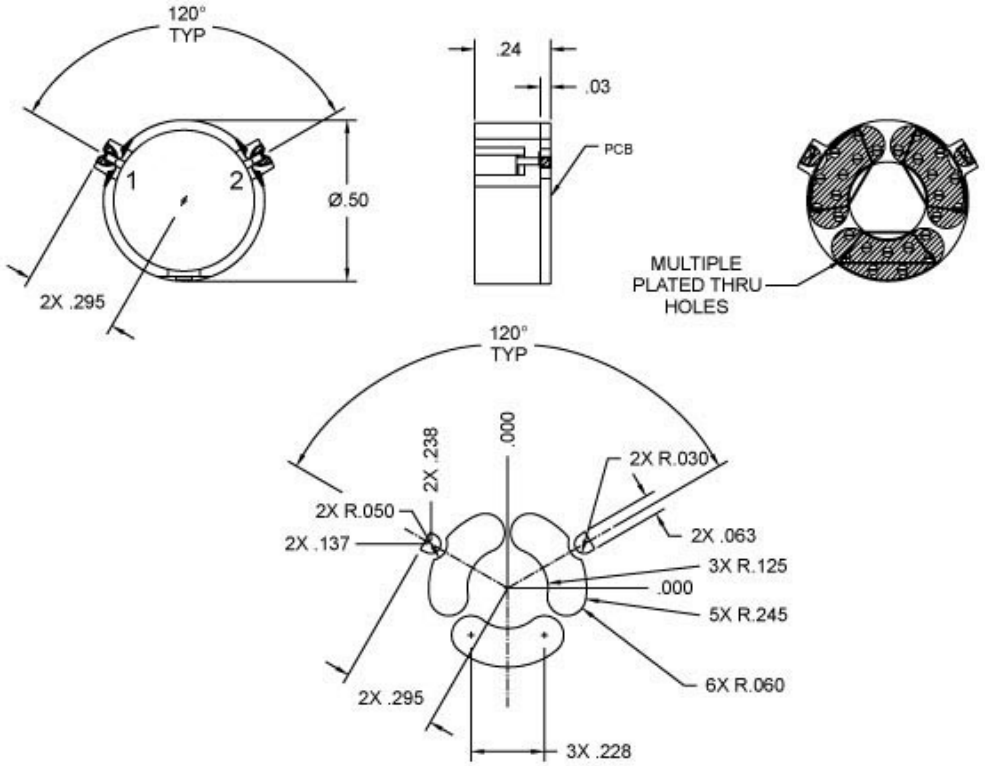
120°
TYP
1
2
Ø.50
2X .295
.24
.03
PCB
MULTIPLE
PLATED THRU
HOLES
120°
TYP
2X .238
.000
2X R.030
2X R.050
2X .137
2X .063
3X R.125
.000
5X R.245
6X R.060
2X .295
3X .228